Copyright Scientific Specialties, Inc.
This drawing and/or any technical information relating to it is issued in strict confidence and my not be reproduced or used for manufacture without written permission. Upon receipt of which it is the users responsibility to seek confirmation of any dimensions and production tolerances.

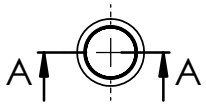

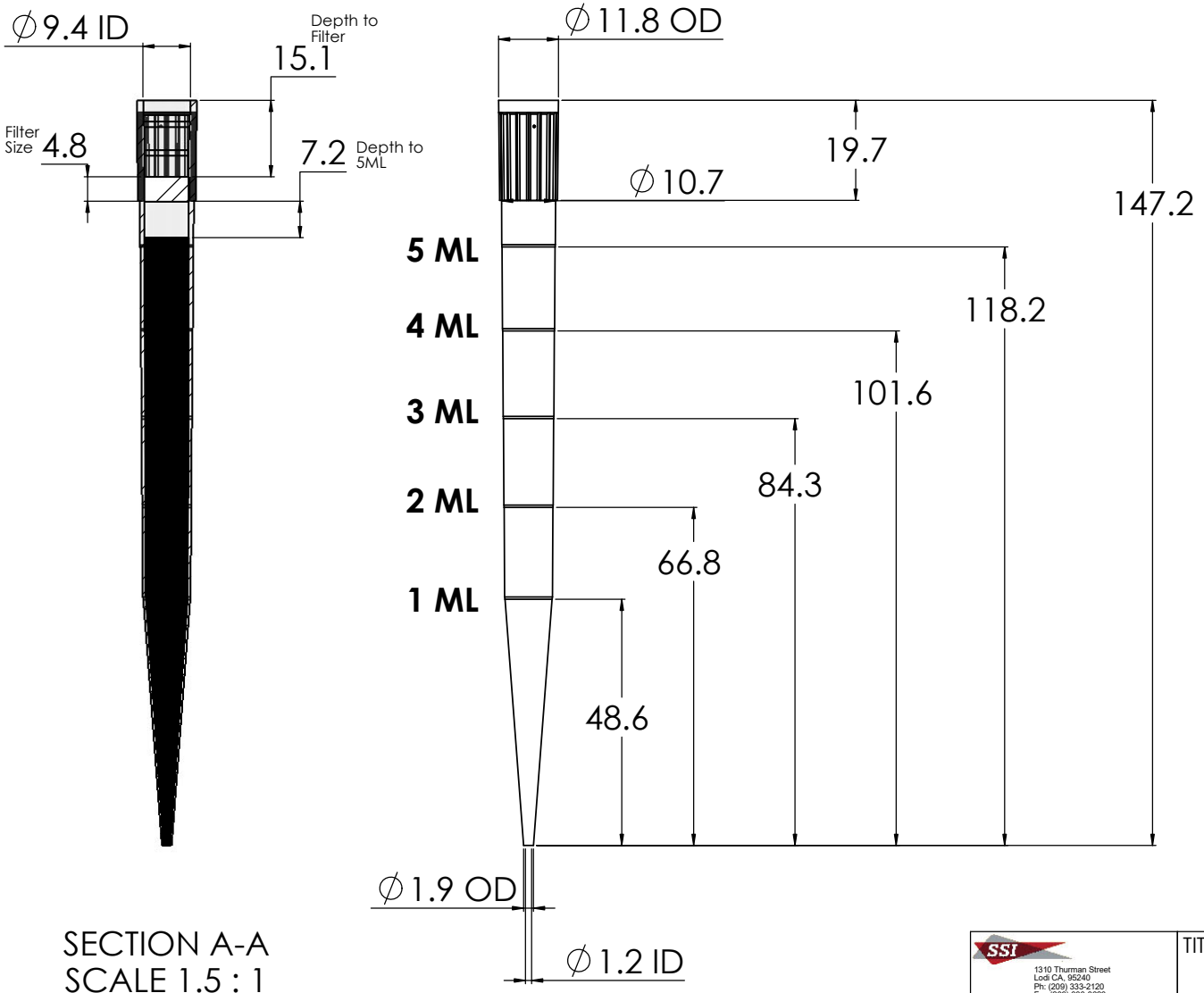

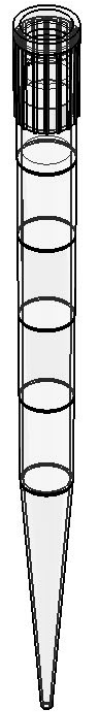

SECTION A-A
SCALE 1.5 : 1

SSI
1310 Thurman Street
Lodi CA, 95240
Ph: (209) 333-2120
Fx: (209) 333-8623
info@scientificspecialties.com

TITLE: 444X-0F 5mL Filtered FINN Type Tip

UNLESS OTHERWISE SPECIFIED
DIMENSIONS ARE IN MILLIMETERS

ITEM:	REV.:	DATE:
444X-0F	*REL*	*8/7/2025*